User's guide

SMRI2

Description

This guide is designed to describe the SMRI2 bearingless encoder. The purpose of this encoder is to measure both linear and angular displacements in industrial machines and automation systems. The measurement system includes a magnetic ring, conversion electronics and a magnetic sensor. The ring is fitted with alternating magnetic north/south poles having a 2-mm pitch size called the pole pitch P (see on page 13). The sensor reads the magnetic ring whilst it turns, so it detects the displacement and produces a digital output signal equivalent to the one of an incremental encoder or a linear scale. The sensor has to be compulsorily matched with 2 mm pole pitch MRI magnetic rings.

Table of contents

1 - Safety summary

1.1 Safety

- Always adhere to the professional safety and accident prevention regulations applicable to your country during device installation and operation;
- installation and maintenance operations have to be carried out by qualified personnel only, with power supply disconnected and stationary mechanical devices;
- device must be used only for the purpose appropriate to its design: use for purposes other than those for which it has been designed could result in serious personal and/or the environment damage;
- high current, voltage and moving mechanical parts can cause serious or fatal injury;
- warning ! Do not use in explosive or flammable areas;
- failure to comply with these precautions or with specific warnings elsewhere in this manual violates safety standards of design, manufacture, and intended use of the equipment;
- Lika Electronic s.r.l. assumes no liability for the customer's failure to comply with these requirements.

1.2 Electrical safety

- Turn OFF power supply before connecting the device;
- connect according to explanation in section "6 - Electrical connections";
- wires of output signals which are not used must be insulated singularly;

- in compliance with 2004/108/EC norm on electromagnetic compatibility, following precautions must be taken:
  - before handling and installing the equipment, discharge electrical charge from your body and tools which may come in touch with the device;
  - power supply must be stabilized without noise; install EMC filters on device power supply if needed;
  - always use shielded cables (twisted pair cables whenever possible);
  - avoid cables runs longer than necessary;
  - avoid running the signal cable near high voltage power cables;
  - mount the device as far as possible from any capacitive or inductive noise source; shield the device from noise source if needed;
  - to guarantee a correct working of the device, avoid using strong magnets on or near by the unit;
  - minimize noise by connecting the shield (or the connector housing) and the sensor to ground. Make sure that ground is not affected by noise.

1.3 Mechanical safety

- Install the device following strictly the information in section "5 - Mounting instructions";
- mechanical installation has to be carried out with stationary mechanical devices;
- do not disassemble the unit;
- do not tool the unit;
- delicate electronic equipment: handle with care; do not subject the unit to knocks or shocks;
- protect the unit against acid solutions or chemicals that may damage it;
- respect the environmental characteristics declared by manufacturer;
- we suggest installing the unit providing protection means against waste, especially swarf as turnings, chips, or filings; should this not be possible, please make sure that adequate cleaning measures (as for instance brushes, scrapers, jets of compressed air, etc.) are in place in order to prevent the sensor and the magnetic ring from jamming.

2 - Identification

Device can be identified through the **ordering code** and the **serial number** printed on the label applied to its body. Information is listed in the delivery document too. Please always quote the ordering code and the serial number when reaching Lika Electronic for purchasing spare parts or needing assistance. For any information on the technical characteristics of the product refer to the technical datasheet.

Warning: devices having ordering code ending with "/Sxxx" may have mechanical and electrical characteristics different from standard and be supplied with additional documentation for special connections (Technical Info).

3 – Overall dimensions

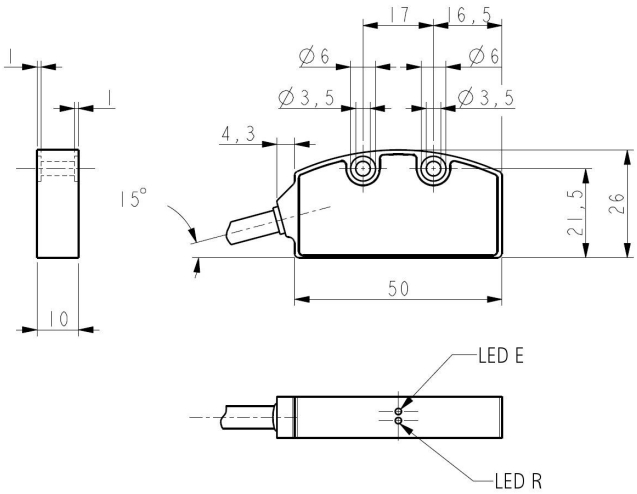

Figure 1 - Overall dimensions

4 - Installation

WARNING
Installation has to be carried out by qualified personnel only, with power supply disconnected and mechanical parts compulsorily in stop.

Protect the device against knocks, frictions, solvents as well as under and over temperatures. Please never stretch the cable. Do not pull or carry by cable. Do not use the cable as a handle. we suggest installing the unit providing protection means against waste, especially swarf as turnings, chips, or filings; should this not be possible, please make sure that adequate cleaning measures (as for instance brushes, scrapers, jets of compressed air, etc.) are in place in order to prevent the sensor and the magnetic ring from jamming.

WARNING
Observe precautions for handling electrostatic discharge sensitive devices.

5 - Mounting instructions

SMRI bearingless encoder has to be compulsorily used with 2 mm pole pitch MRI magnetic rings; see the order code: MRI/xxx-xx-**2**-xxx. Make sure the mounting tolerances between the sensor and the MRI ring indicated in Figure 2, Figure 3 and Figure 4 are always met. Avoid contact between the parts.

5.1 Mounting the sensor on MRI magnetic ring

Fix the sensor by means of **two M3 15 mm / 0.6" min. long cylinder head screws** inserted in the provided holes. M3 screws recommended **tightening torque: 1.1 Nm**.
Please always comply with the mounting tolerances indicated in the section "5.2 Mounting tolerances".

NOTE
With Reference "R" please pay attention to the mounting side of the magnetic ring: there is the incremental track on one side, the reference track on the other side. Mount the sensor and the magnetic ring having the Reference label as shown in Figure 2.

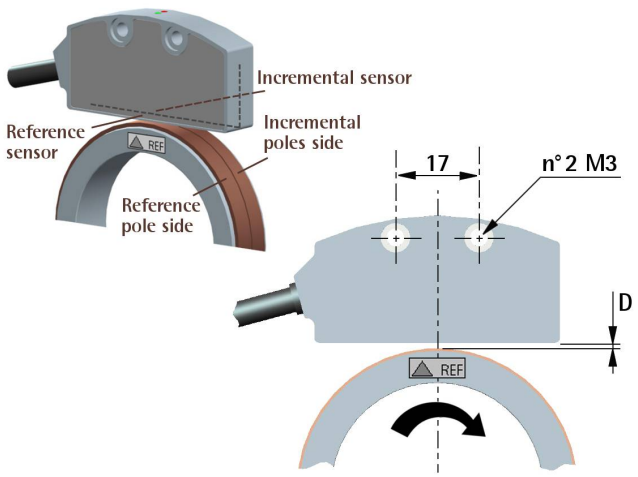

Figure 2 - Mounting the sensor

When the sensor is installed on magnetic rings having a 10 mm / 0.4" wide magnetic surface, line up both the sensor and the ring on the central axis; as previously stated, if the Reference track is provided pay attention to the mounting direction of the sensor and the ring. When magnetic rings having a 5 mm / 0.2" wide magnetic surface are used, line up the sensor and the ring as shown in Figure 3; please consider that the incremental sensor is located laterally in the sensing head. With 5 mm rings the mounting direction of the ring makes no difference (but ascertain that the sensor is properly aligned on the correct side!).

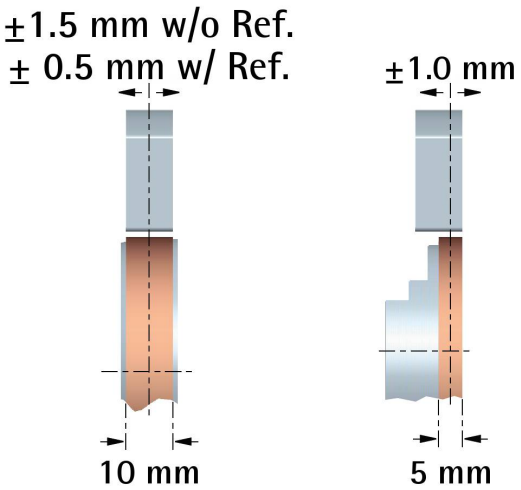

Figure 3 - Sensor – ring alignment

5.2 Mounting tolerances

Always comply with the mounting tolerances indicated in the following table and in Figure 2, Figure 3 and Figure 4. **The recommended distance D is 0.5 mm.**

Distance sensor / magnetic ring (D)		
w/o Reference	w/ Reference	recommended
0.1 – 1.0 mm	0.1 – 0.7 mm	0.5 mm

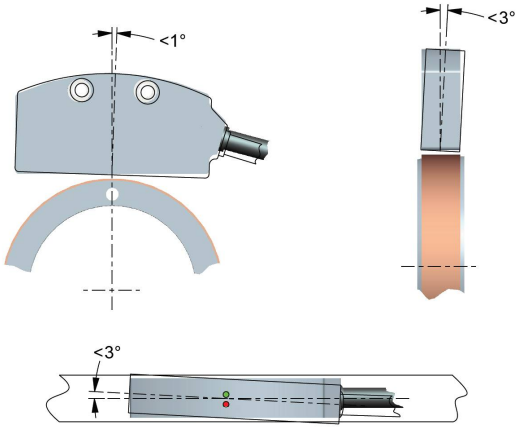

Figure 4 - Mounting tolerances

WARNING
Prevent the sensor **1** and the magnetic ring **2** from coming into contact.

6 - Electrical connections

WARNING
Electrical connection has to be carried out by qualified personnel only, with power supply disconnected and mechanical parts compulsorily in stop.

Function	M12 connector	M8 cable
0VDC	1	Black
+VDC [1]	2	Red
A	3	Yellow
/A	4	Blue
B	5	Green
/B	6	Orange
0 [2]	7	White
/0 [2]	8	Grey
Shielding	Case	Shield

1 See order code:

EXAMPLE
SMRI2-**L**-**1**-... +VDC = +5VDC ± 5%
SMRI2-**YC**-**2**-... +VDC = +10VDC +30VDC

2 Only available with -R- order code

NOTE
All sensors can provide inverted signals.
A = A signal;
/A = inverted A signal (or complementary signal).
Magnetic sensors can provide AB0, /AB0 output signals. We advise the inverted signals always be connected if the receiving device will accept them. Otherwise each output should be insulated singularly.

WARNING
Connecting /A, /B, or /0 each other, to +VDC or 0VDC may cause permanent damage to the sensor.

6.1 M12 8-pin connector specifications

M12 8-pin connector
male, frontal side
A coding

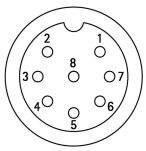

6.2 M8 cable specifications

Type : LIKA HI-FLEX M8
Wires : 6 x 0.14 mm^2 + 2 x 0.22 mm^2
Shield : Tinned copper braid
External Ø : Ø 5.3 ÷ 5.6 mm
Impedance : ≤ 148 Ω/Km (6), ≤ 90 Ω/Km (2)
Min. bend radius: Ø x 7.5

The total length of the cable connecting the sensor and the receiving device should not exceed 50 m (55 Yd). Should greater distances to be reached please contact Lika Electronic Technical Dept.
Do not bend the cable excessively; the min. **bending radius is: Ø x 7.5** at a 10 mm min. distance from the sensor head.

6.3 GND connections

Minimize noise by connecting the shield (or the connector housing) and the sensor to ground. Make sure that ground is not affected by noise.

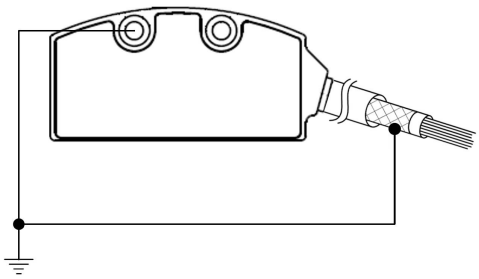

6.4 Diagnostic LEDs

LED	Description
E Error (blinking red)	Error 1: mounting tolerances between the sensor and the ring are not met; Error 2: rotary speed of the ring too high (frequency error).
R Reference (green)	Ring with reference (-R- order code): reference mark detected, zero signal. It is equivalent to the high logic level of the 0 output signal. Ring without reference (-N- order code): the electric power is supplied to the device.

7 - Output signals

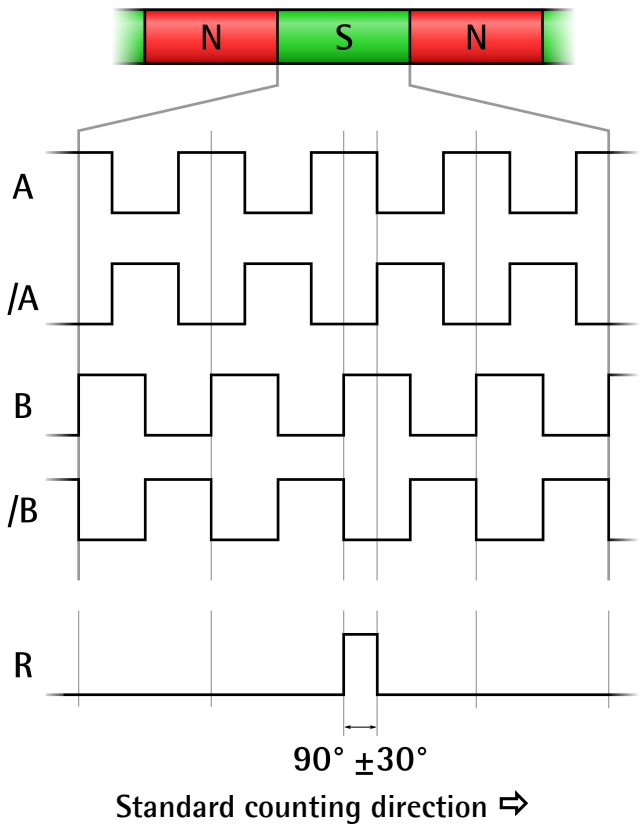

Figure 5 - Example with interpolation factor 4x

As the sensor reads the magnetic ring whilst it turns, it detects the displacement and issues an output signal equivalent to the one of an incremental encoder or a linear scale. The output signal frequency is proportional to the measuring speed while the number of output pulses is proportional to the mechanical displacement of the ring.
Please consider that the "R" reference signal is provided once per revolution of the magnetic ring (see the section "7.1 Reference "R"").
The order code indicates the interpolation factor, if you want to know the number of edges per revolution (intended after multiplying by 4), multiply the interpolation factor by the number of magnetic poles in the magnetic ring.

The number of edges per revolution results from:

interpolation * number of ring poles

EXAMPLE

SMRI2-L-1-**32**-N-L2-J: interpolation = 32;
MRI/114-**182**-2-100: number of poles = 182.

Hence:

32 * 182 = 5,824 edges per revolution

Encoder PPR result from the following calculation:

$$\text{Encoder PPR} = \frac{\text{edges/rev.}}{4} = \frac{5{,}824}{4} = 1{,}456 \text{ PPR}$$

NOTE

The **standard counting direction** (the channel A leads the channel B) is to be intended with ring rotating as indicated by the arrow in Figure 2.

7.1 Reference "R"

Optional "R" reference signal is provided once per revolution of the magnetic ring (see -R- order code; with -N- order code the Reference signal is not provided). It provides a datum position for use at power-up or following a loss of power. When the sensor detects the Reference mark, the R led lights up green. The Reference signal has a duration of one measuring step (90 electrical degrees ± 30°). The Reference signal can be provided only using magnetic rings having a 10 mm / 0.4" wide magnetic surface. The 5 mm / 0.2" magnetic surface rings cannot be fitted with the Reference track.

8 - Maintenance

The magnetic measurement system does not need any particular maintenance; please always consider it is a delicate electronic equipment and therefore it must be handled with care. From time to time we recommend the following operations:

- Check the mounting tolerances between the sensor and the magnetic ring are always met

along the whole measuring length. Mechanical plays could compromise the proper counting;
- the surface of the magnetic ring should be cleaned periodically using a soft cloth to remove dust, chips, moisture etc.

9 - Troubleshooting

The following list shows some typical errors that could occur during installation and operation of the magnetic measurement system.

Fault:
The system does not work (no pulse output).

Possible cause:
- The ring or the sensor has been mounted incorrectly.
- A magnetic part has been inserted between the sensor and the substrate. Only non-magnetic materials are allowed between the sensor and substrate.
- The sensor touches the substrate because the tolerance gap between the sensor and the substrate is not met. Check the sensor active side if damaged.
- The sensor has been damaged by short circuit, inversion of polarity or wrong connection.

Fault:
The measured values are inaccurate.

Possible cause:
- The mounting tolerances are not thoroughly met.
- The connection cable runs near to high voltage cable or shield is not connected properly. See the section "6 - Electrical connections".
- The max. counting frequency of the receiving device is too low.
- A section of the magnetic substrate has been damaged either mechanically or magnetically.
- The measuring error is caused by torsion of the machine structure. Check parallelism and symmetry of machine movement.

This page intentionally left blank

Document release	Description
1.0	1st issue
1.1	New web links
1.2	Reference information
1.3	Mounting instructions updated, general review

Dispose separately

Lika Electronic
Via S. Lorenzo, 25 - 36010 Carrè (VI) - Italy

Tel. +39 0445 806600
Fax +39 0445 806699

Italy : eMail info@lika.it - www.lika.it
World : eMail info@lika.biz - www.lika.biz